ALLIANCE FOR GREEN HEAT
low carbon, renewable and local

BTEC
Biomass Thermal Energy Council

Power Conditioning and Liquid Cooling for Thermoelectric Stoves

Wednesday, December 6, 2017

11:00 AM EDT

In support of the Alliance for Green Heat's 4th Wood Stove Competition in November 2018

NEXT GENERATION WoodStove DesignChallenge

ALLIANCE FOR GREEN HEAT
low carbon, renewable and local

BTEC
Biomass Thermal Energy Council

Quick Notes

- Two Audio Options: Streaming Audio and Dial-In.
  1. Streaming Audio/Computer Speakers (Default)
  2. Dial-In: Use the **Audio Panel** (right side of screen) to see dial-in instructions.
- Call-in separately from your telephone.

- Ask questions using the **Questions Panel** on the right side of your screen.

- The recording of the webinar and the slides will be available after the event. Registrants will be notified by email.

Audio

Questions

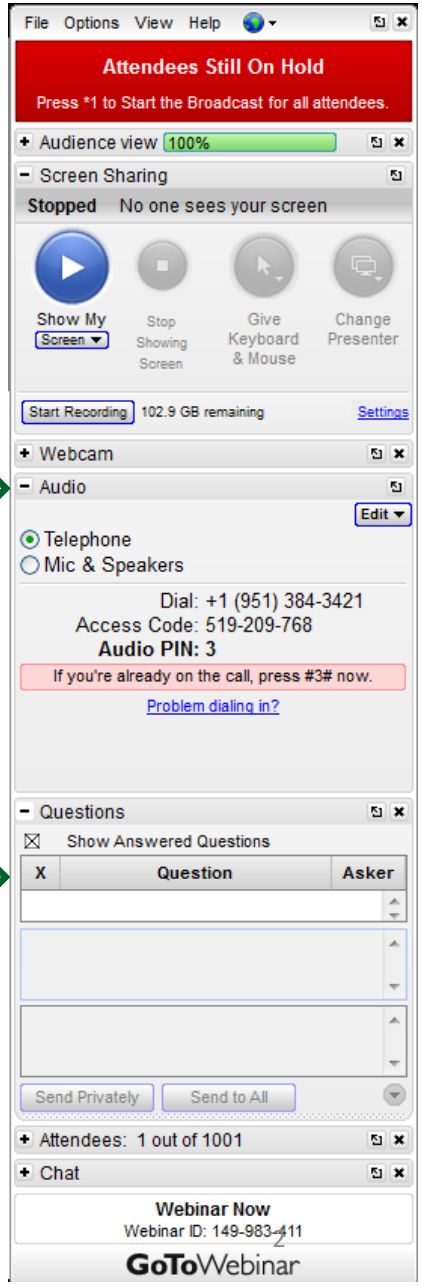

ALLIANCE FOR GREEN HEAT
low carbon, renewable and local

BTEC
Biomass Thermal Energy Council

Agenda:

- Ken Adler – Overview of AGH and Wood Stove Design Challenge
- Peter Thompson – Overview of BTEC
- David Nemir – Power Conditioning
- Doug Crane – Liquid Cooling in Thermoelectric Applications
- Attendee Questions

ALLIANCE
FOR GREEN HEAT
low carbon, renewable and local

- ✓ 501c3 nonprofit
- ✓ Promotes clean & efficient biomass heaters
- ✓ National voice for wood heat consumers
- ✓ Hosts design competitions
- ✓ Encourages transparency from manufacturers and regulators

NEXT GENERATION
WoodStove DesignChallenge

- 4th Wood Stove Design Challenge
  - November 9-14, 2018
  - National Mall in Washington DC
- Two Competition Categories:
  - Automated stoves
  - Thermoelectric stoves

Thank you!

John Ackerly – jackerly@forgreenheat.org

Ken Adler – kadler@forgreenheat.org
(for thermoelectric issues)

Alliance for Green Heat
Takoma Park, MD
www.forgreenheat.org
301-204-9562

ALLIANCE FOR GREEN HEAT
low carbon, renewable and local

NEXT GENERATION WoodStove DesignChallenge

BTEC
Biomass Thermal Energy Council

About BTEC

The national trade association for the modern wood heating industry.

- Engage in technical codes and standards development, public advocacy, and education.

- **60+ members and associates across the US and Canada:**
- Fuel Producers
- Manufacturers
- Sellers
- Installers
- Service Providers
- Universities
- Non-profits & NGOs
- Government agencies

Bear Mountain Forest Products
SINCE 1988

CENTRAL BOILER

Forest Energy Corporation

NEW ENGLAND
WOOD PELLET, LLC

BTEC
Biomass Thermal Energy Council

For More Information:

http://www.biomassthermal.org

202-596-3974

Jeff Serfass – jeff.serfass@biomassthermal.org
Executive Director

David Bancroft – david.Bancroft@biomassthermal.org
Deputy Executive Director

Peter Thompson– pthompson@ttcorp.com
Communication Operations, Membership

ALLIANCE FOR GREEN HEAT
low carbon, renewable and local

BTEC
Biomass Thermal Energy Council

David Nemir

In support of the Alliance for Green Heat's 4th Wood Stove Competition in November 2018

NEXT GENERATION WoodStove DesignChallenge

POWER CONDITIONING FOR THERMOELECTRIC GENERATORS

David Nemir
TXL Group, Inc.
Webinar 12/6/2017

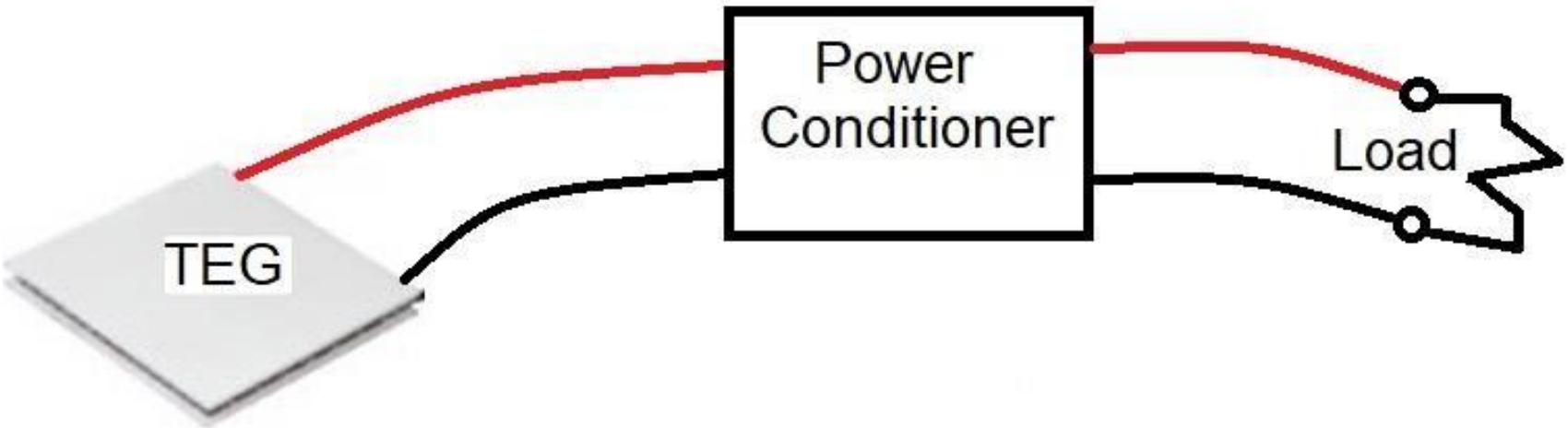

WHEN DO WE NEED POWER CONDITIONING?

THE ANSWER DEPENDS UPON THE NATURE OF THE SOURCE AND THE LOAD

SOURCE

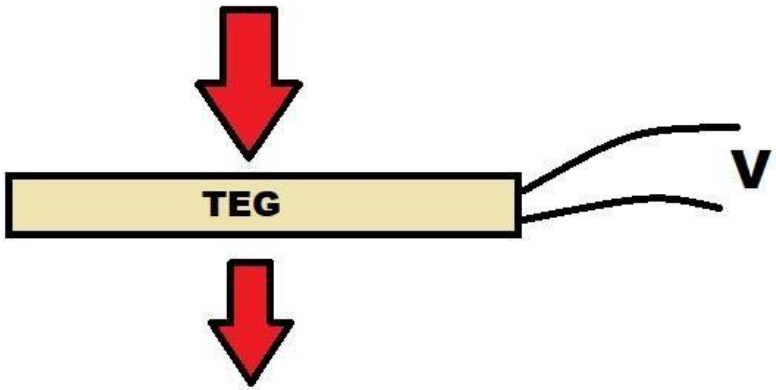

THERMAL ENERGY FLUX (WATTS) CAN BE VARIABLE SO GENERATED ELECTRICAL POWER VARIES

WHEN HEAT FLOW CAN CHANGE DIRECTIONS, VOLTAGE POLARITY WILL CHANGE

LOAD

LIGHTS & HEATERS (BROAD RANGE, BIPOLAR)

FANS BROAD RANGE, UNIPOLAR

ELECTRONICS & BATTERIES -- TIGHTER REQUIREMENTS, LOW RIPPLE

WHAT CAN A POWER CONVERTER DO?

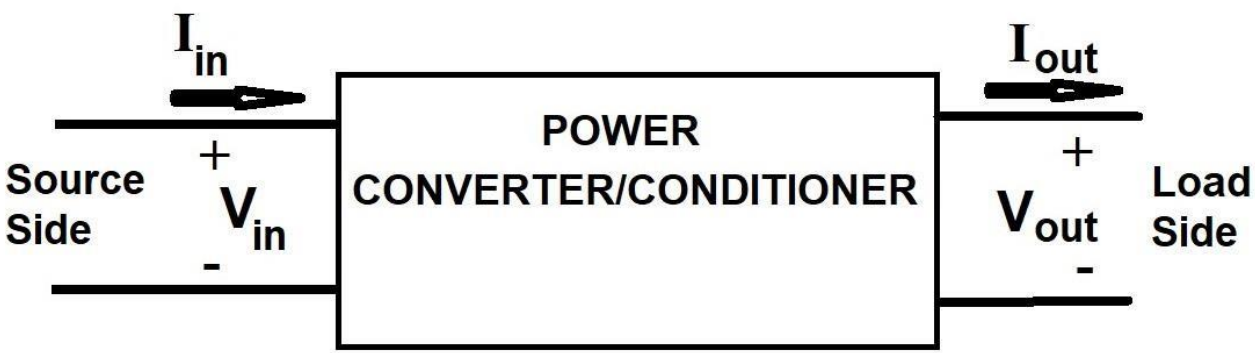

FUNCTION	PURPOSE
BOOST	Vout = Vset > Vin
BUCK	Vout = Vset < Vin
REGULATION	Vmin<Vout<Vmax
FILTERING	Vout ripple < Threshold
RECTIFICATION	Vout = |Vin|
IMPEDANCE MATCHING	IMPROVED POWER DELIVERY

ALWAYS!

Power Out < Power In

MODEL FOR A THERMOELECTRIC GENERATOR

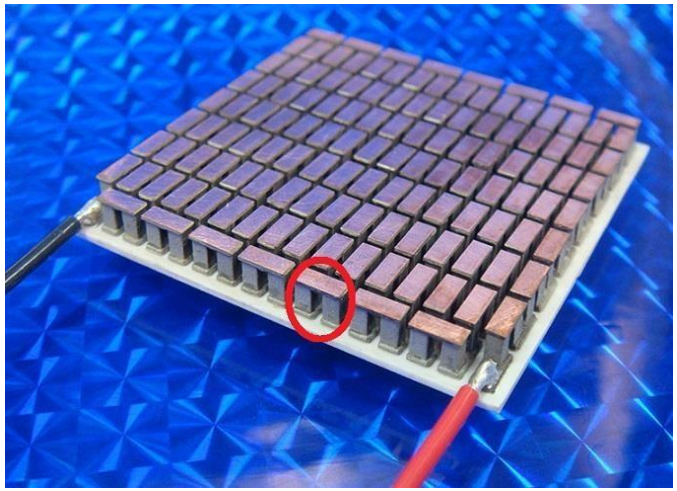

n couples

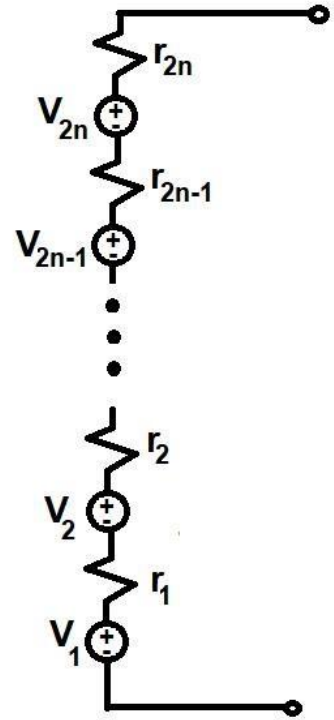

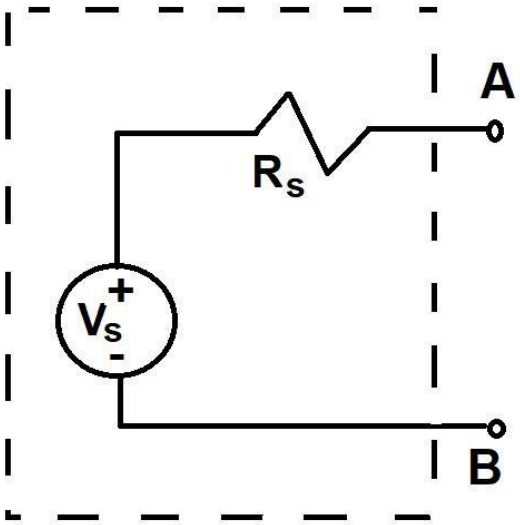

THEVENIN MODEL

DETERMINING A THEVENIN MODEL

SOURCE CHARACTERIZATION REQUIRES Vs Rs

FOR Vs, PLACE EXPECTED ΔT ACROSS THE MODULE AND DIRECTLY MEASURE Vs

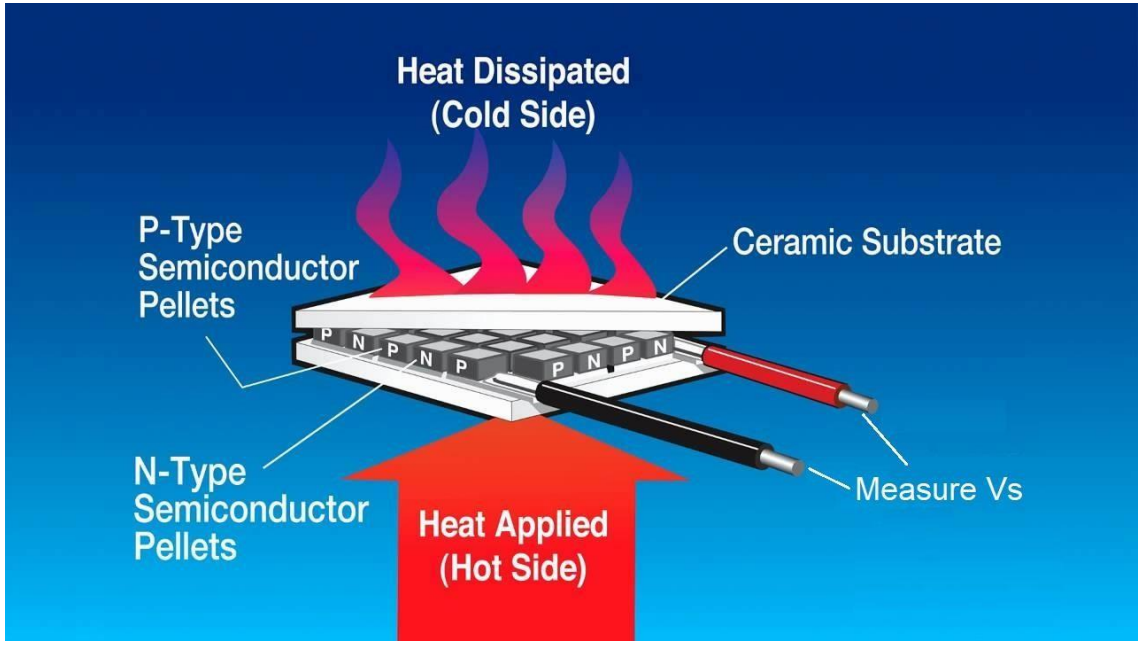

FOR Rs, PLACE ANY ΔT ACROSS THE MODULE & MEASURE OPEN CIRCUIT VOLTAGE, Vs. THEN PLACE A KNOWN RESISTOR, RL, ACROSS THE MODULE AND MEASURE VL

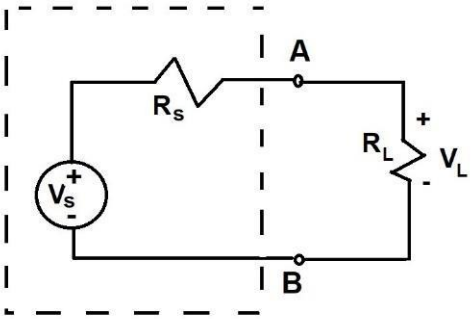

THEN SOLVE FOR Rs FROM THE EQUATION

$$V_L = V_S R_L/(R_S + R_L)$$

IMPEDANCE MATCHING

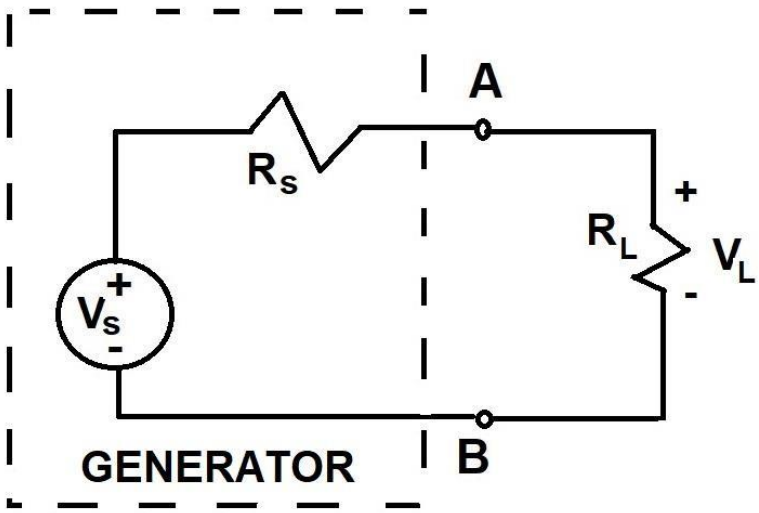

POWER DELIVERED TO THE LOAD:

$P_L = V_L^2/R_L = V_S^2 R_L/(R_S + R_L)^2$

THIS IS CALLED IMPEDANCE MATCHING. WE GET THE MOST POWER FROM A DC GENERATOR WHEN THE LOAD MATCHES THE GENERATOR INTERNAL RESISTANCE.

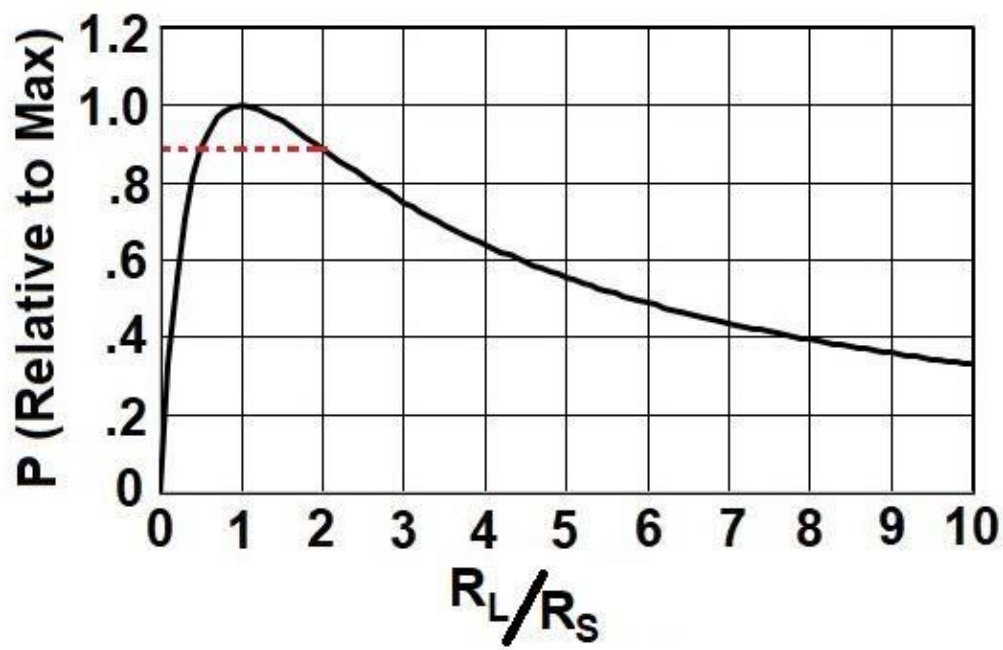

VOLTAGE CONVERSION

CONVERTING POWER AT ONE VOLTAGE TO A HIGHER VOLTAGE CAN BE DONE THROUGH COUPLING THROUGH AN ELECTRIC FIELD OR A MAGNETIC FIELD

SWITCHED CAPACITOR
IDEA: CHARGE CAPACITORS IN PARALLEL THEN CONNECT IN SERIES

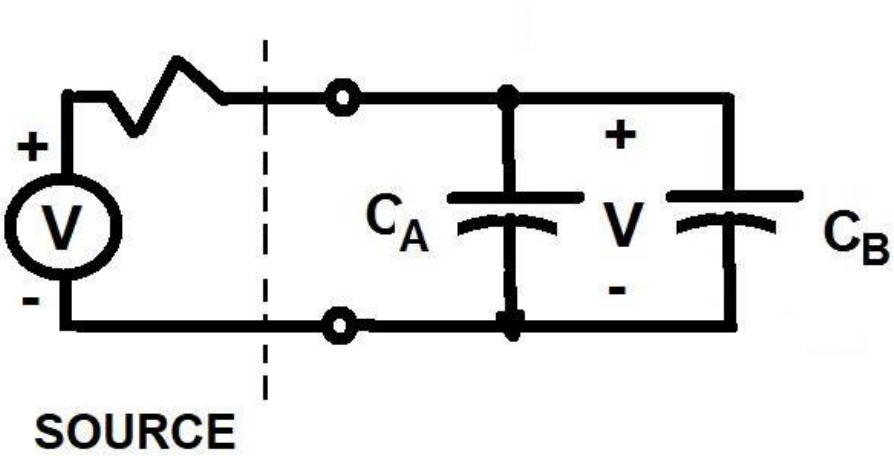

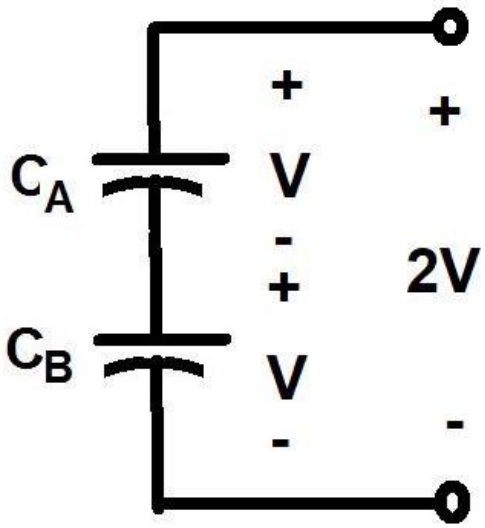

SWITCHED CAPACITOR VOLTAGE DOUBLER

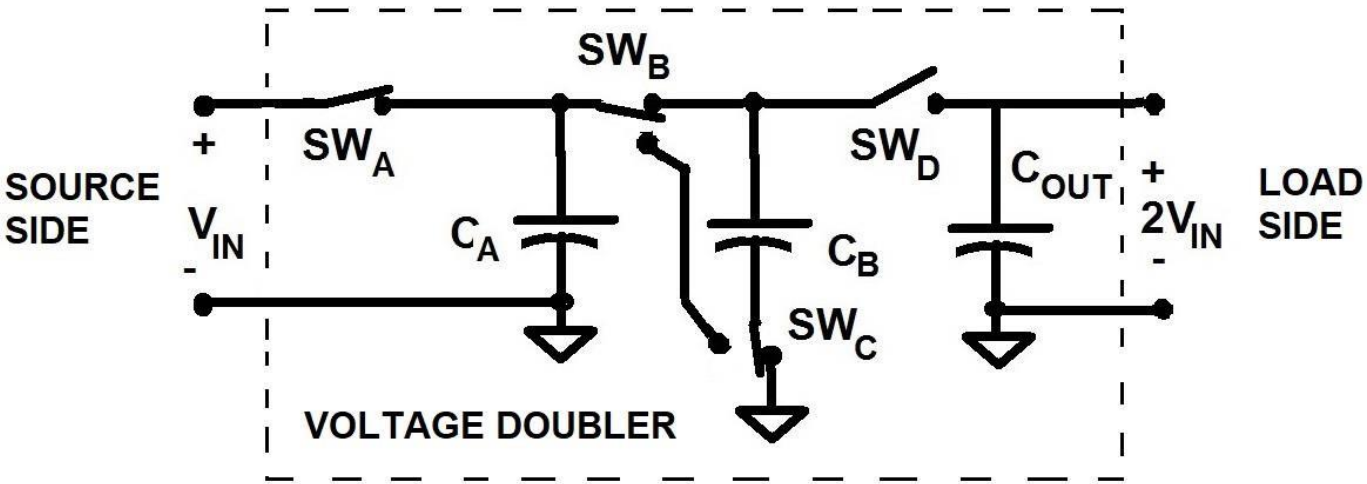

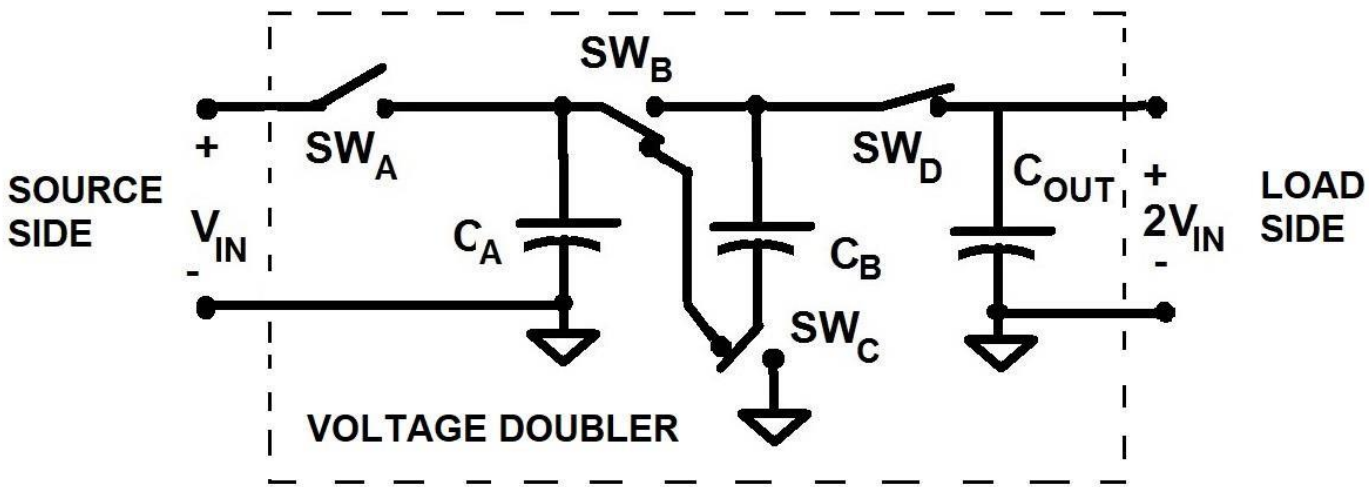

SWITCHED CAPACITOR VOLTAGE REDUCTION

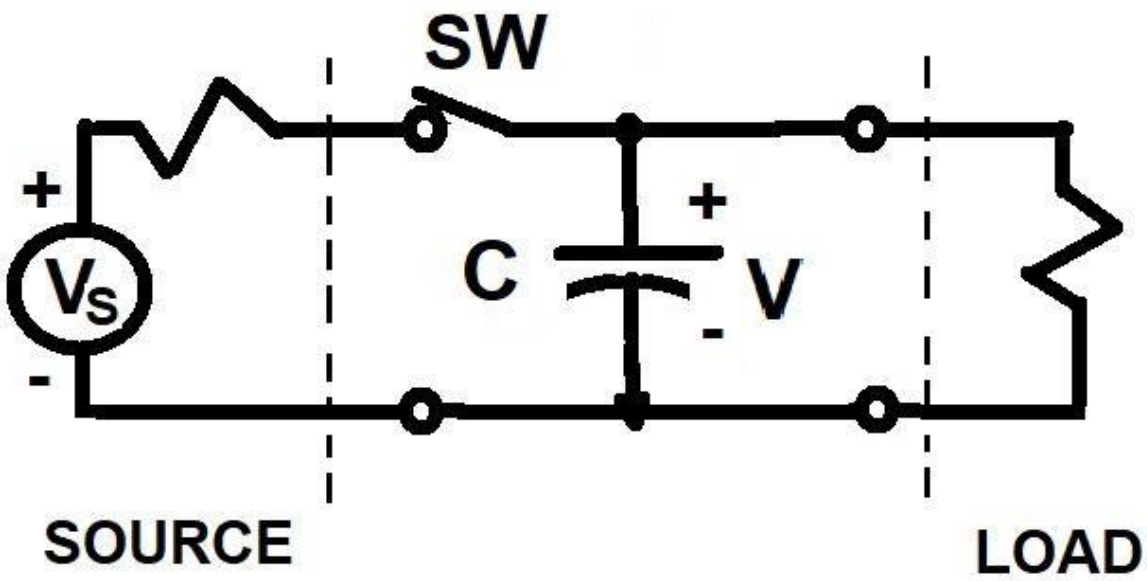

CONTROL ALGORITHM IS BASED ON MEASUREMENTS OF V. CONTROL ALGORITHM HOLDS V TO BETWEEN A MINIMUM AND MAXIMUM TARGET

WHEN V > Vmax, OPEN THE SWITCH
WHEN V < Vmin, CLOSE THE SWITCH

VOLTAGE CONVERSION VIA MAGNETIC FIELD

PUT ENERGY FROM SOURCE INTO A MAGNETIC FLUX THEN REMOVE ENERGY FROM THE FLUX TO SOURCE A LOAD

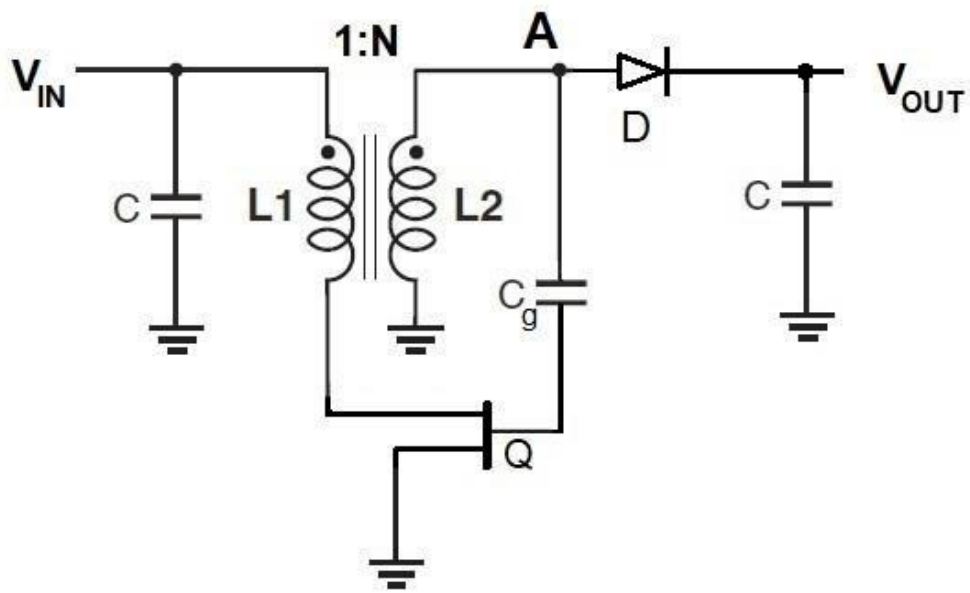

BOOTSTRAP CONVERTER IS SIMPLE, SELF-STARTING, CAN ACHIEVE HIGH VOLTAGE GAIN BUT RELATIVELY INEFFICIENT.

FLYBACK CONVERTER

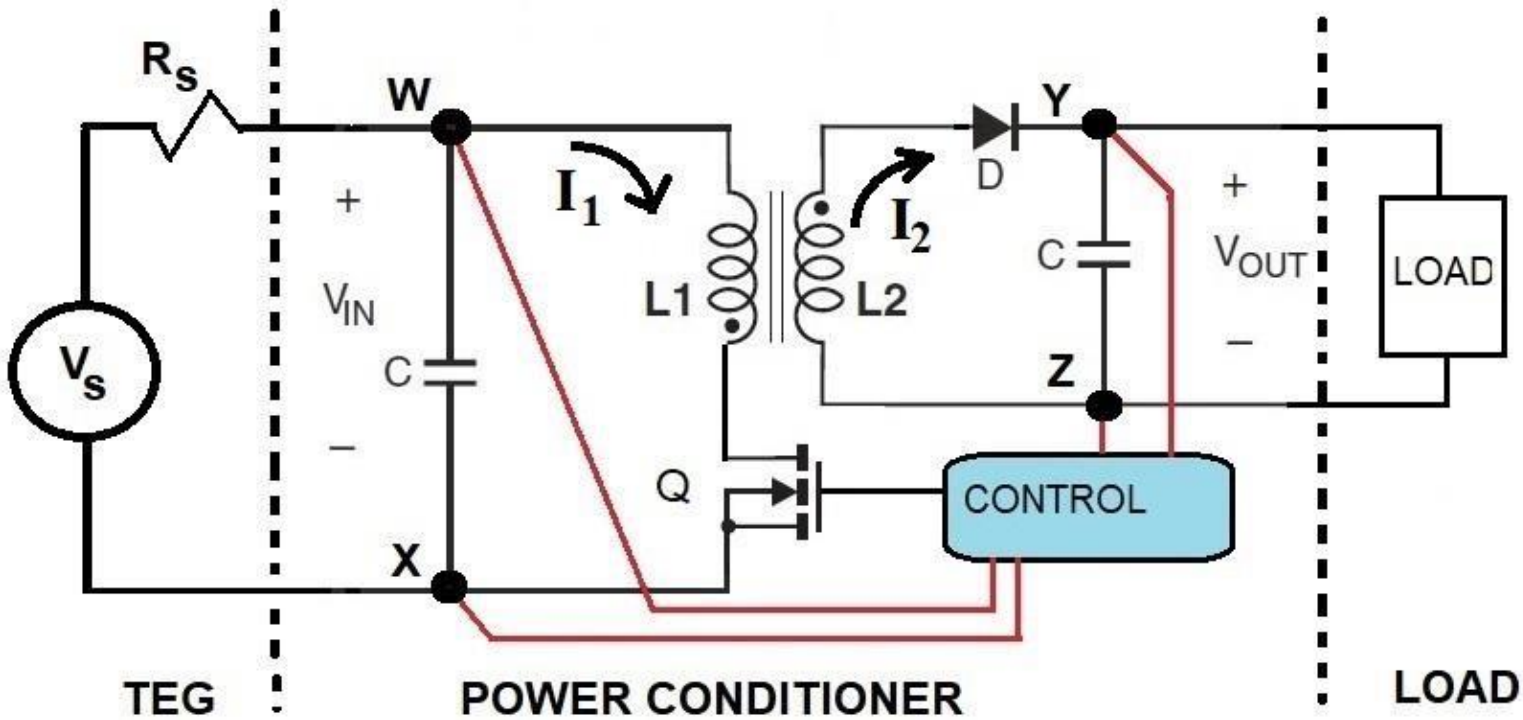

A FLYBACK CONVERTER HAS HIGHER EFFICIENCY BUT REQUIRES A CONTROLLER. IT CAN OFFER:

- **VOLTAGE BOOST WITH REGULATION**
- **VOLTAGE BUCK WITH REGULATION**
- **IMPEDANCE MATCH (POWER POINT TRACKING)**

POWER CONVERSION: BUY OR BUILD?

BUY!
THERE IS AN AMAZING RANGE OF FULLY DEBUGGED PRODUCTS ON THE MARKET WITH A HIGH DEGREE OF INTEGRATION. READILY AVAILABLE FROM DIGIKEY ELECTRONICS AND MOUSER ELECTRONICS

www.digikey.com FOR CHIPSETS, LOOK UP POWER MANAGEMENT IC (PMIC)
FOR COMPLETE TURN-KEY MODULES (RECOMMENDED) LOOK UP DC-DC CONVERTER.
THERE ARE 1,672 UNIQUE, ACTIVE PARTS IN STOCK

www.mouser.com FOR CHIPSETS USE KEYWORD "REGULATOR". FOR MODULES LOOK UP "DC/DC CONVERTERS". 11,366 CHOICES

TXL GROUP OFFERINGS

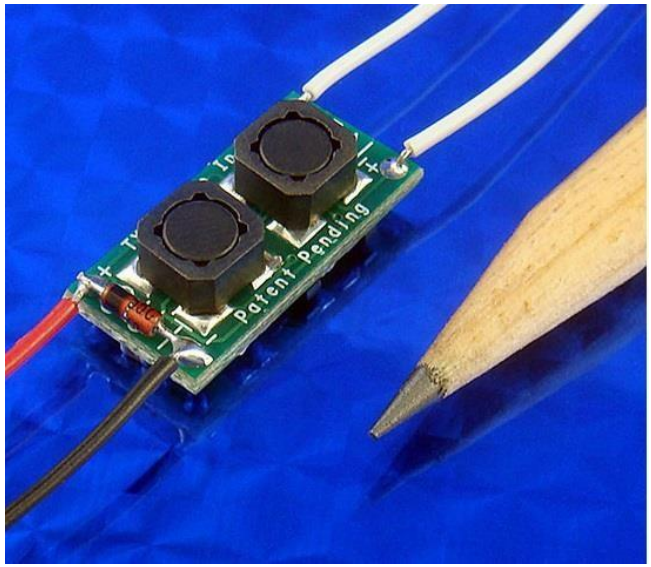

BOOTSTRAP CONVERTER. SELF POWERED, Vin >= 40 mV

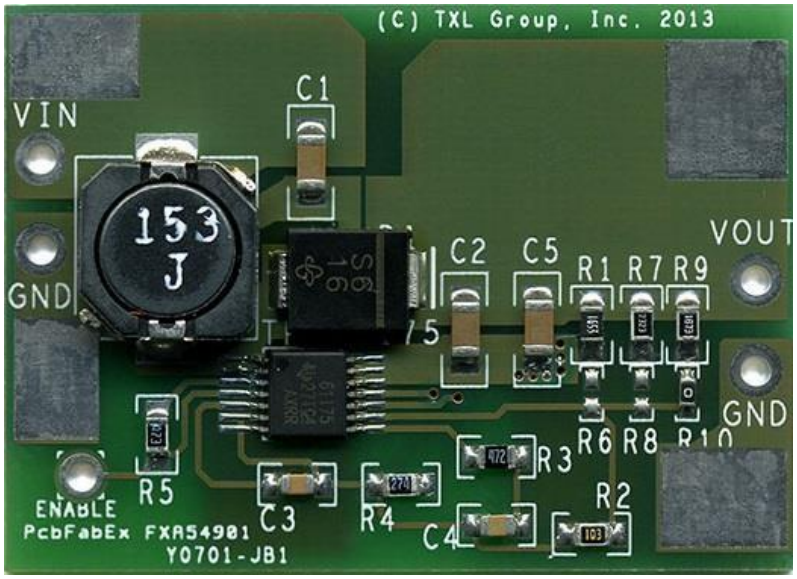

PROGRAMMABLE BOOST CONVERTER. 8 W. Vout = +6V to +36V

REGULATED BUCK/BOOST, Vin=0.4 TO 5.5 V, PROGRAMMABLE OUTPUT

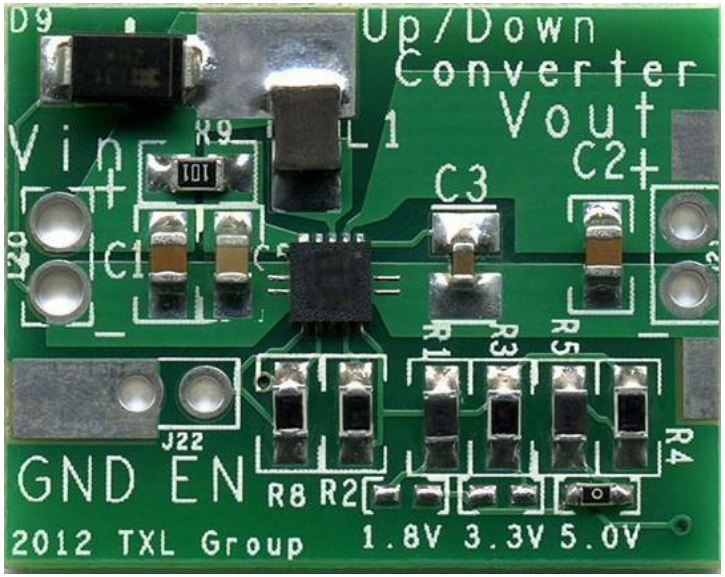

CHOOSING A WOOD STOVE POWER CONVERTER

ARISES FROM AN ITERATIVE EXERCISE INVOLVING THE SOURCE AND LOAD

SOURCE SIDE

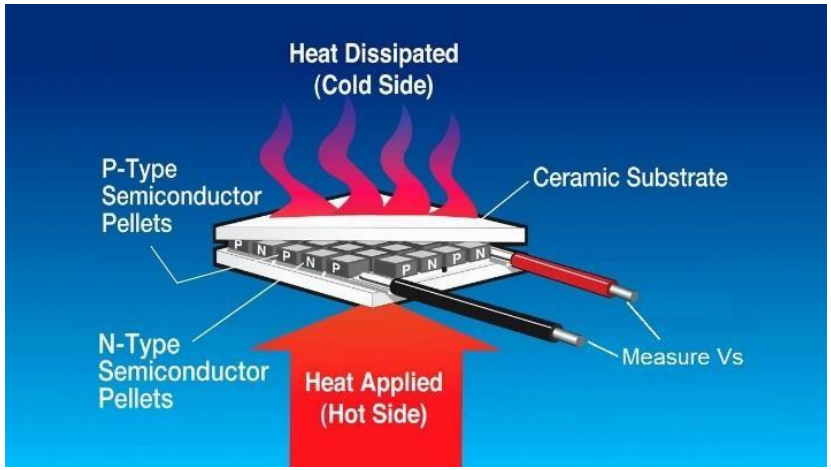

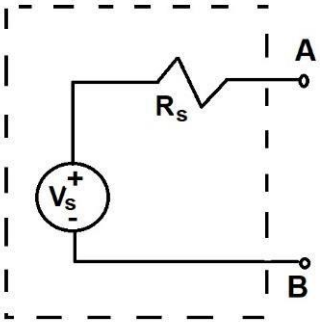

SET UP THERMAL CIRCUIT AND MEASURE BEST CASE OPEN CKT VOLTAGE, Vs

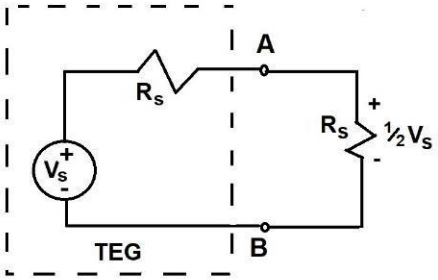

THEN ATTACH A LOAD Rs AND CALCULATE MAX POSSIBLE PGEN

LOAD SIDE

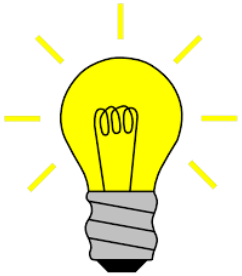

LIGHTS AND FANS CAN USE A BROAD RANGE OF UNREGULATED VOLTAGES. MAY NOT NEED POWER CONDITIONING.

ELECTRONICS GENERALLY REQUIRE REGULATED VOLTAGE & WILL REQUIRE POWER CONDITIONING, BUCK/BOOST & FILTERING.

IF YOU HAVE MULTIPLE LOADS, THEN YOU MAY NEED MULTIPLE POWER CONDITIONING ELEMENTS.

AN OPTION FOR ELECTRONIC LOADS

IF AN ELECTRONIC LOAD DOES NOT REQUIRE CONTINUOUS POWER (EG: PHONE CHARGING) THEN A BATTERY CAN BE USED FOR POWER ACCUMULATION

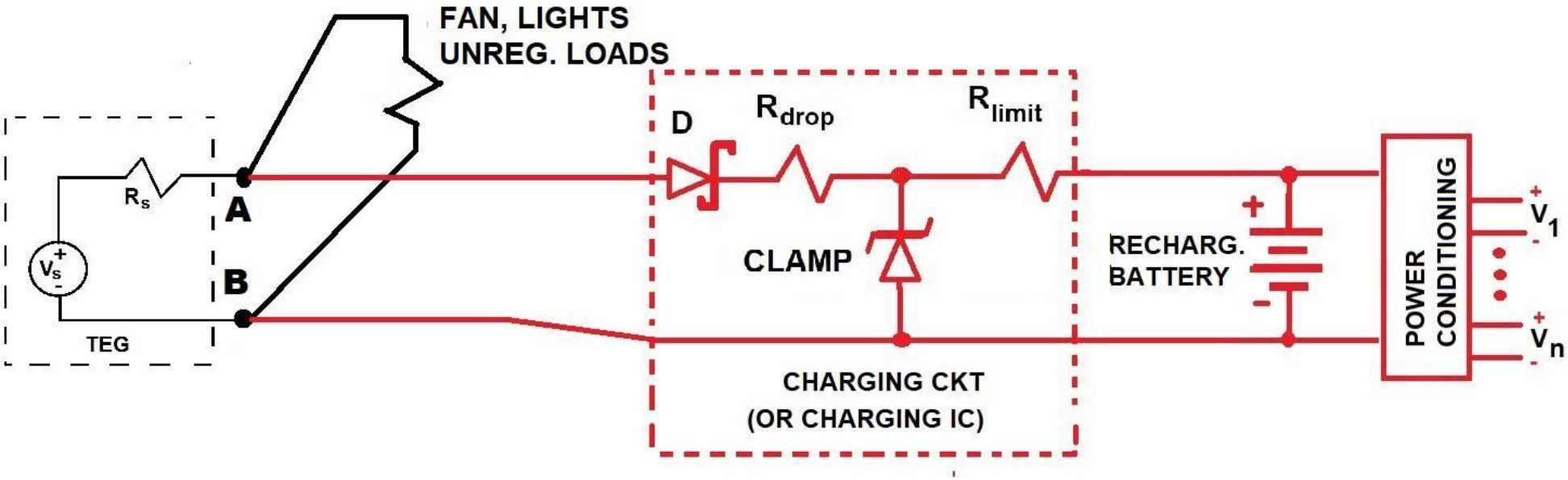

COMBINING MULTIPLE DC POWER SOURCES (DIODE ORING)

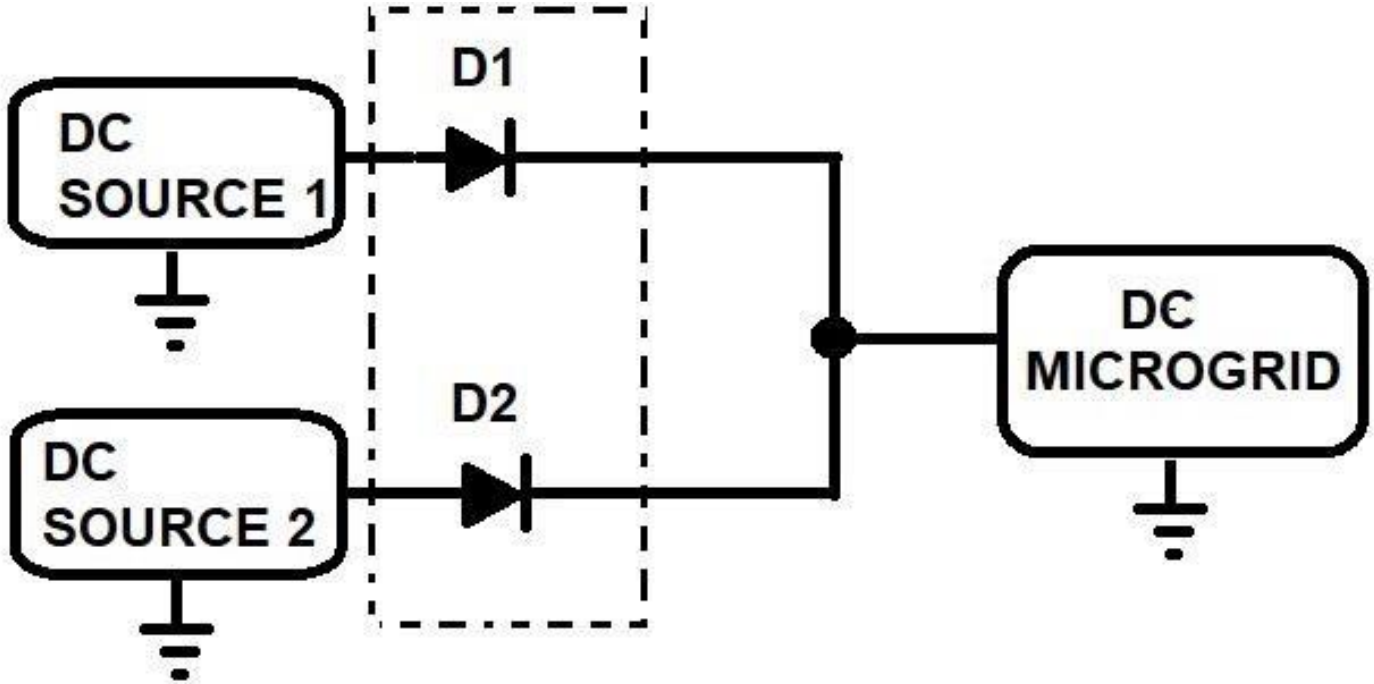

TO DECOUPLE MULTIPLE DC SOURCES SUCH AS TEG, PV, BATTERY, RECTIFIED AC. THE SOURCES SHOULD HAVE SAME VOLTAGE

LOW POWER (< 10 W) DIODES CAN BE SCHOTTKY

HIGHER POWER SPECIALIZED PRODUCTS LIKE MICROSEMI LX2410A
ALSO PHOENIX CONTACT REDUNDANCY MODULE FOR PS DECOUPLING

ANOTHER TOPOLOGY

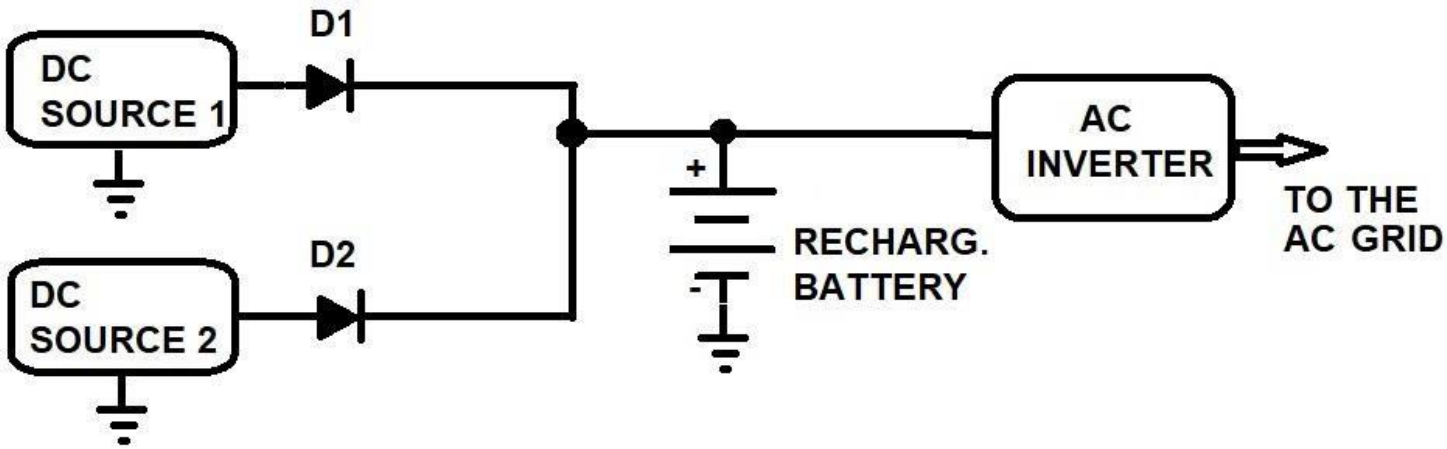

CARE SHOULD BE TAKEN IN BATTERY CHARGE/DRAIN MANAGEMENT. THIS IS DEPENDENT UPON BATTERY CHEMISTRY & SOURCE CHARACTERISTICS. IT MAY BE NECESSARY TO ADD CONDITIONING ELECTRONICS TO SOURCE SIDE OF BATTERY.

FOR FURTHER INFORMATION KEY WORDS:

DC MICROGRID

MULTIPLE INPUT SINGLE OUTPUT DC-DC CONVERTER

CONTACT INFORMATION

David Nemir
TXL Group, Inc.
2000 Wyoming Ave.
El Paso, TX 79903
USA
www.txlgroup.com

Tel: 1-915-533-7800
Email: david@txlgroup.com

ALLIANCE FOR GREEN HEAT
low carbon, renewable and local

BTEC
Biomass Thermal Energy Council

Doug Crane

In support of the Alliance for Green Heat's 4th Wood Stove Competition in November 2018

NEXT GENERATION WoodStove DesignChallenge

Liquid Cooling in Thermoelectric Applications

Doug Crane

12/6/17

Webinar for Alliance for Green Heat's 4th Wood Stove Design Challenge

Lon Bell Consulting

Benefit of Liquid Cooling

- Higher heat transfer coefficients
  - Liquid forced convection heat transfer coefficients are typically 2 to 100 times higher than gas forced convection
  - Lower thermal resistances at interfaces increase efficiency and electric power output
- Higher heat capacity leads to lower temperature difference in the flow direction for a given heat and mass flow rate
- Lower parasitic power (fan/pump) because of higher heat capacity and density of liquids compared to gases

Thermal Impedance Matching

- Maximum power output is achieved when the thermal resistance of the heat exchangers is equal to that of the TE device [Ref]
- Total thermal resistance of heat exchangers is the sum of the hot and the cold ends [Ref]
- Minimizing the thermal resistance on the cold end while matching the TE resistance with the hot end provides maximum power

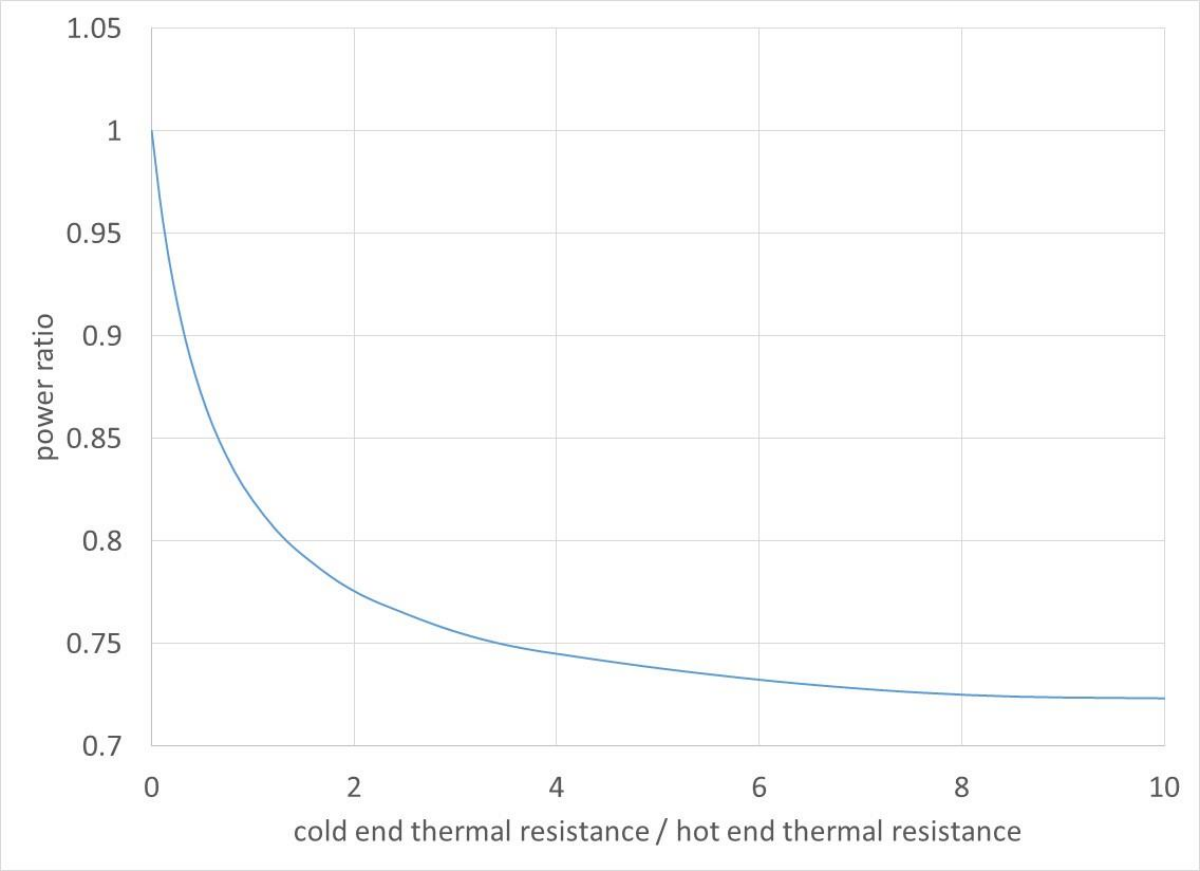

[Ref] Baranowski, Snyder et al, J Applied Phys. 113, 204904, (2013)

LON BELL CONSULTING

Materials and coolants

- Heat exchanger materials are typically aluminum or copper due to their high thermal conductivity.
  - Aluminum has ½ the thermal conductivity of copper, but is lighter weight and lower cost
- Stainless steel and ceramics, such as alumina or silicon carbide, are also common heat exchanger materials
  - Stainless steel has ~5% thermal conductivity of copper, but is lower cost and does not oxidize at high temperatures
  - Depending on how they are manufactured, ceramics can be lower cost, light weight, and provide electrical isolation
- Liquid coolant can be water, ethylene glycol/water mixes (antifreeze used to expand freezing and boiling points) and higher temperature heat transfer liquids such as Dowtherm.
- Thermal interface materials must be used between the TE device and the heat exchanger to prevent high interfacial thermal resistance.

Cold Plates

PowerModule™

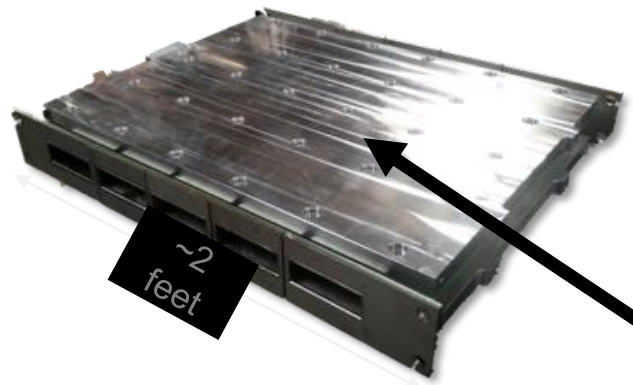

At Alphabet Energy, cold plates were applied in different configurations to provide cold-side heat rejection

PowerCard™

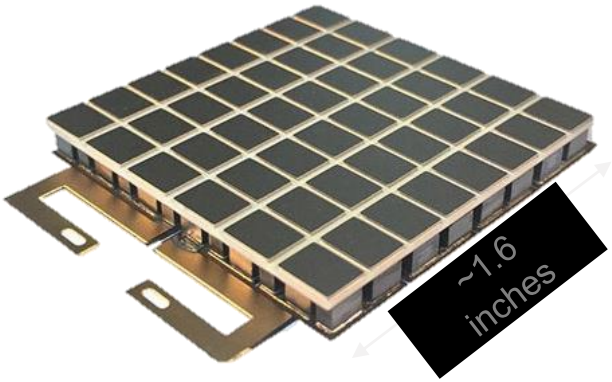

cold plates

PowerModule-AAX™

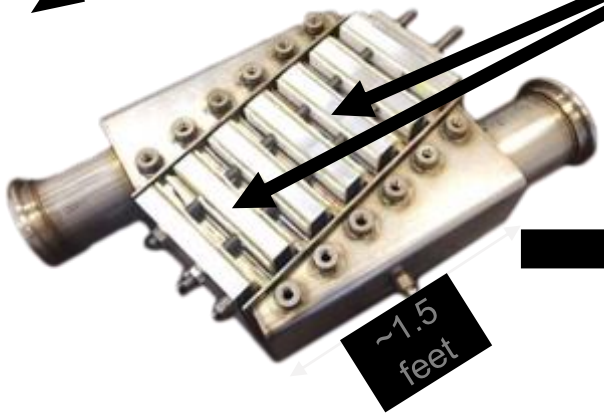

integration in GM Suburban

[Ref] "Thermoelectric Applications: From Automotive to Oil & Gas, Highlighting Design, Modeling & Testing Methodology", ECT 2016

LON BELL CONSULTING

As an example, this 10 kW system is comprised of 32 PowerModules, each with two cold plates.

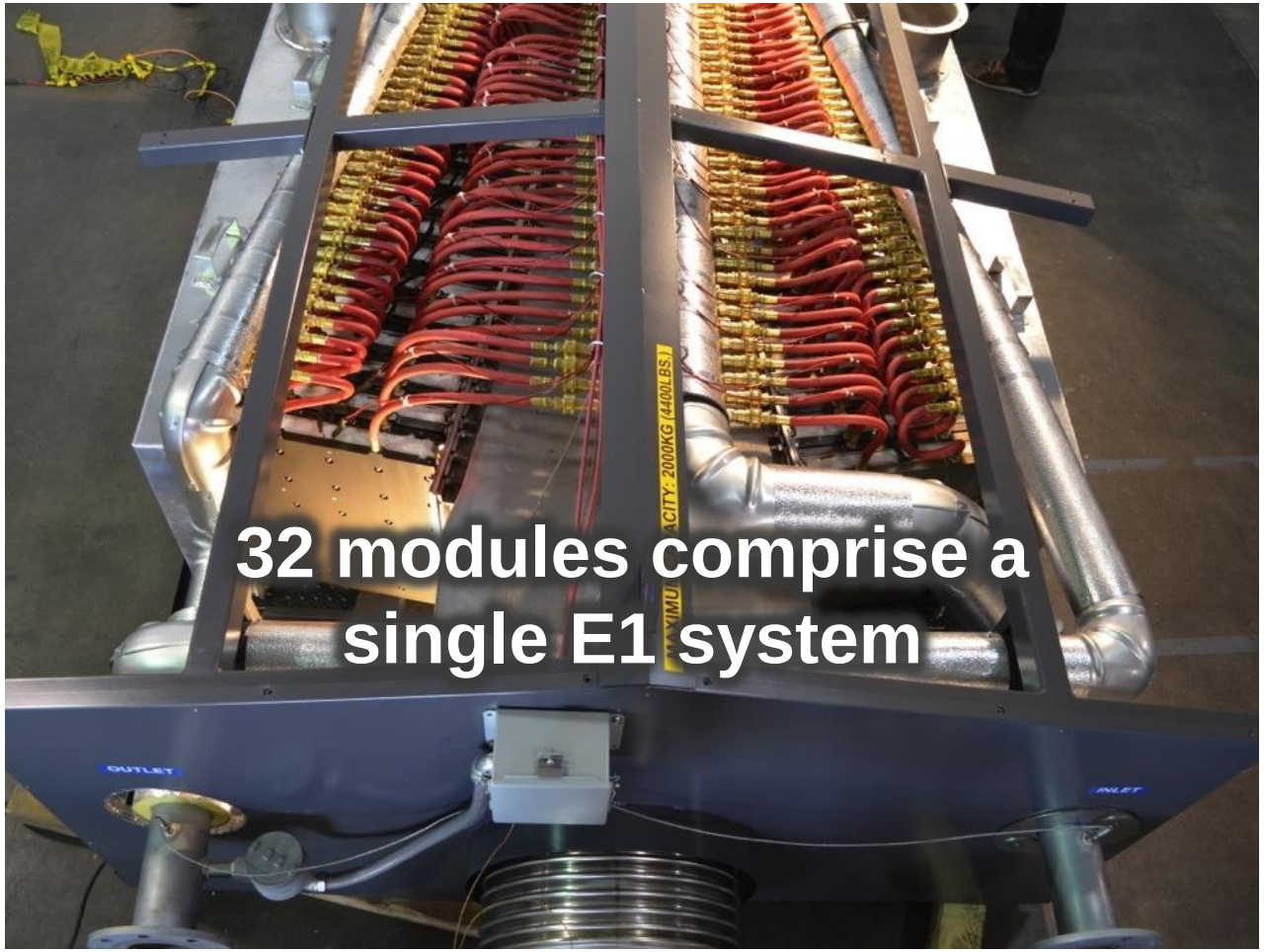

[Ref] “Scaled-Up Development and Performance of Tetrahedrite/Magnesium Silicide-Based Thermoelectric Devices”, ICT 2015

LON BELL CONSULTING

This Power Generating Combustor (PGC) used the same PowerModules and cold plates, producing 2.5 kW.

Thermoelectric Generator

Cooling System

[Ref] "Thermoelectric Applications: From Automotive to Oil & Gas, Highlighting Design, Modeling & Testing Methodology", ECT 2016

LON BELL CONSULTING

At Gentherm, cold plates were applied in still different configurations to provide cold-side heat rejection

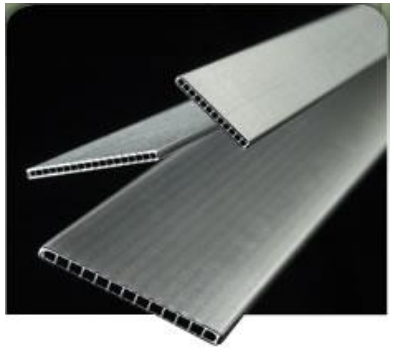

[Ref] http://www.brazeway.com/

[Ref] http://www.lytron.com/Cold-Plates/Standard

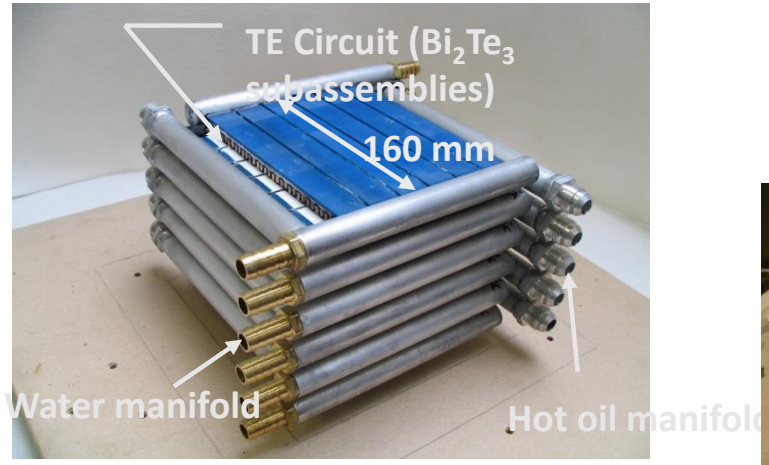

Alternative flat plate design made up of multiple internally finned flat tubes [1]

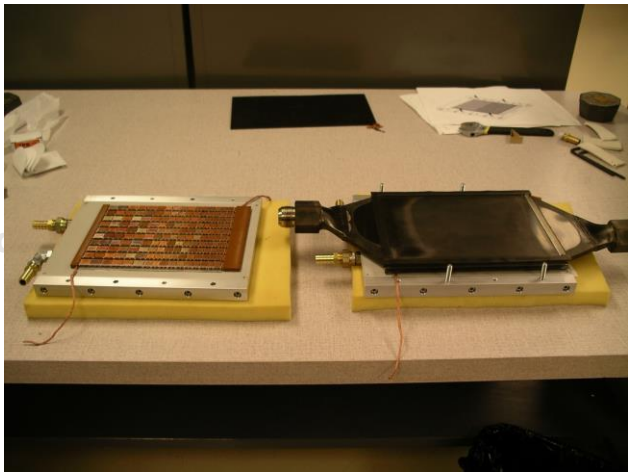

Commercially available cold plate from Lytron used with alternative TE device configuration [2]

[1] "Performance Results of a High Power Density Thermoelectric Generator: Beyond the Couple", ICT 2008

[2] "An introduction to system level steady-state and transient modeling and optimization of high power density thermoelectric generator devices made of segmented thermoelectric elements", ICT 2010

LON BELL CONSULTING

Extended surface enhancements

- Greater area increases heat transfer
- Flow disruption can produce turbulence which increases heat transfer coefficient

  Examples:
  - Straight fins
  - Ruffled fins
  - Perforations

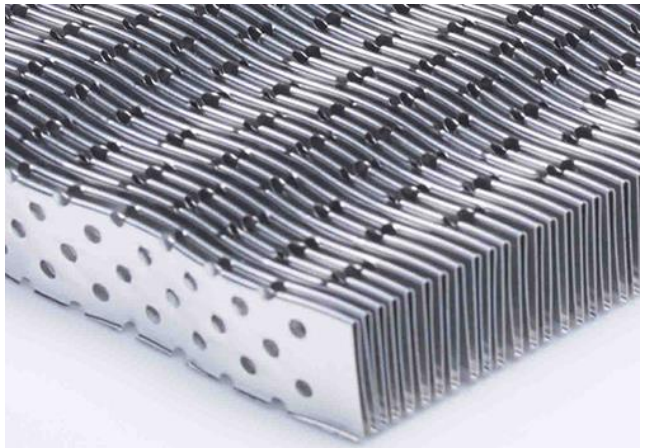

[Ref] http://www.robfin.com/category/ruffled-and-herringbone-fins/page/2/

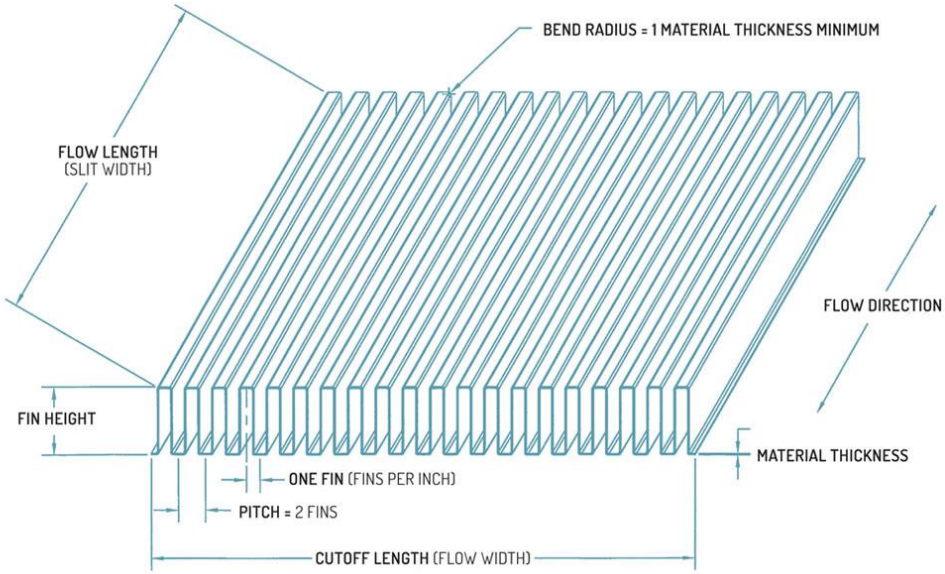

[Ref] http://www.robfin.com/plain-folded-fins/

Extended surface enhancements

Examples:

- Offset fins
- Pin fins

[Ref] http://www.robfin.com/lanced-louvered-folded-fins/

[Ref] https://www.microcooling.com/technology/micro-deformation-technology/

LON BELL CONSULTING

Alternative liquid cooled configuration

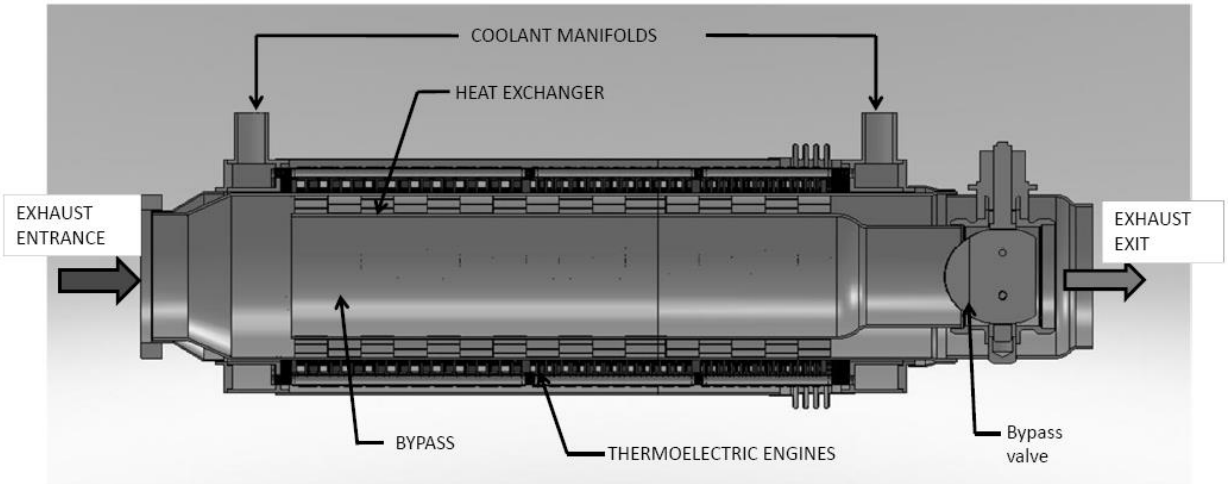

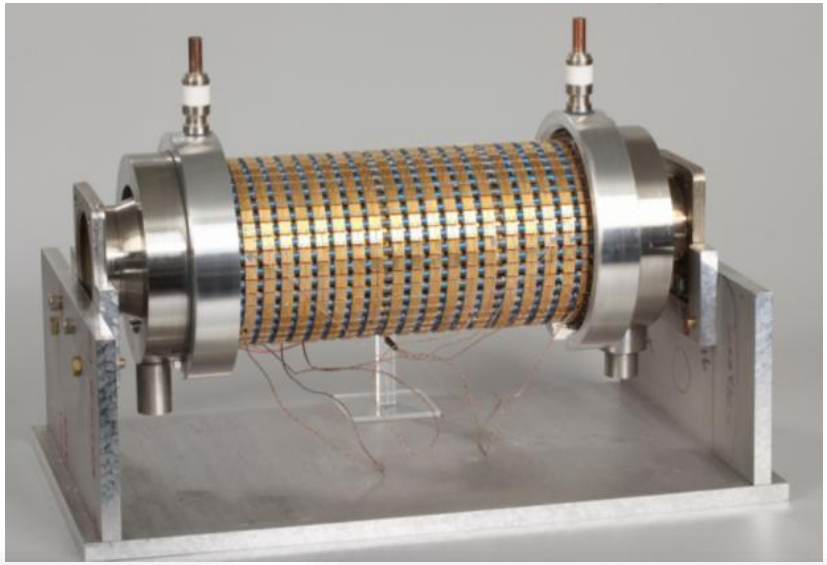

Cooling provided by multiple individual liquid tubes [1]

Other cooling alternatives applied at Gentherm

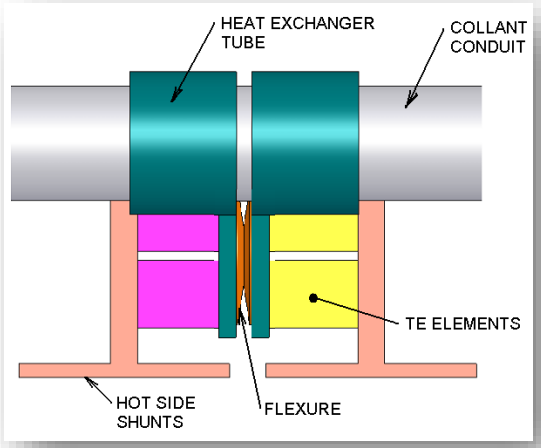

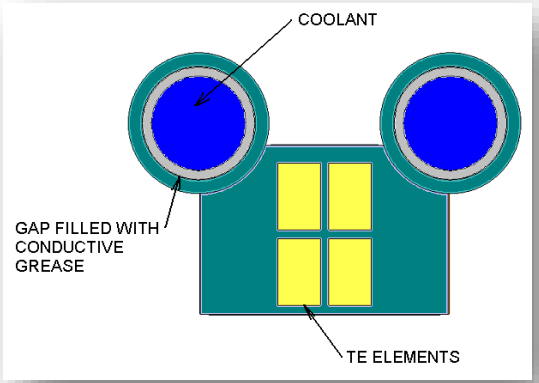

[Ref] Bell and Crane, ICT 2009

[1] "TEG On-Vehicle Performance & Model Validation", ICT 2012

LON BELL CONSULTING

BMW Vehicle Integration

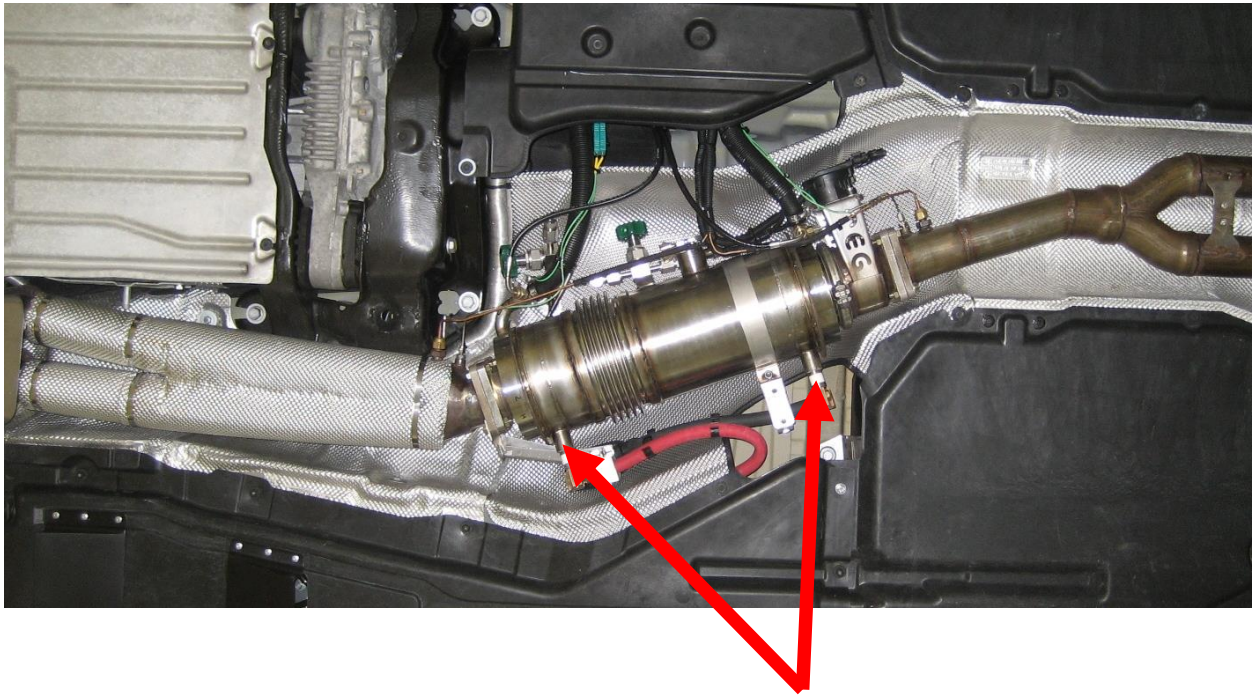

Coolant lines

BMW X6

[Ref] "TEG On-Vehicle Performance & Model Validation", ICT 2012

LON BELL CONSULTING

Ford Vehicle Integration

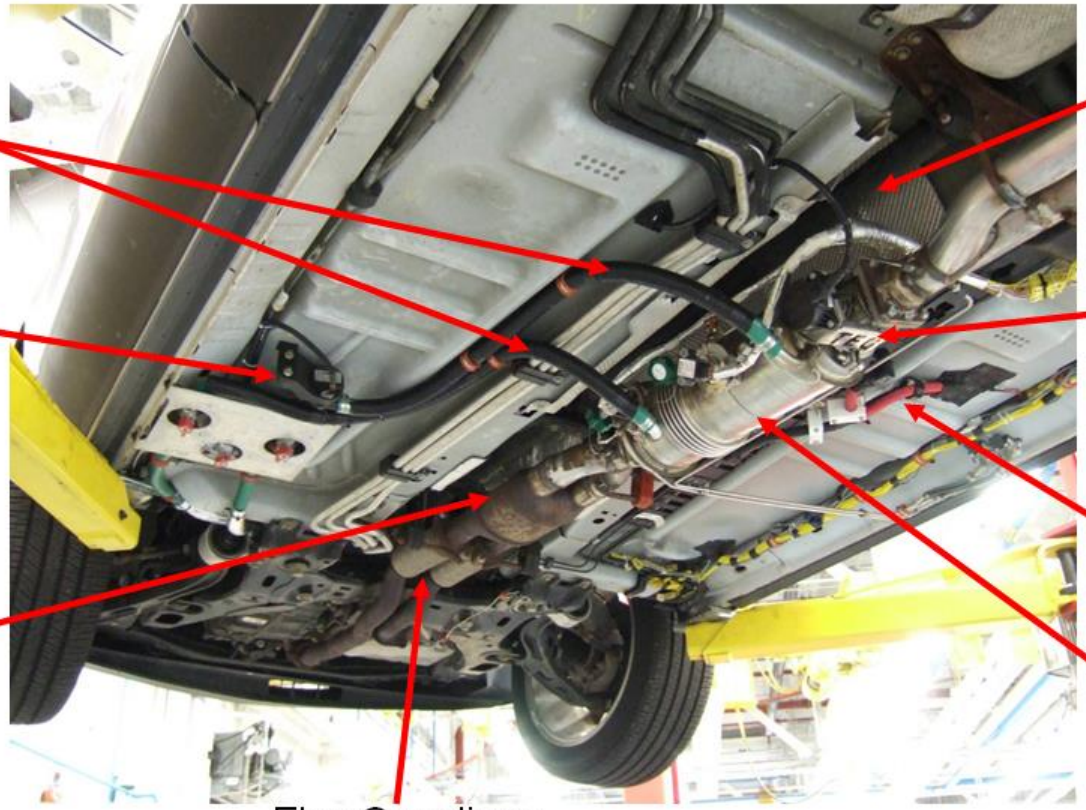

Ford Lincoln MKT

[Ref] "TEG On-Vehicle Performance & Model Validation", ICT 2012

LON BELL CONSULTING

Liquid cooled thermoelectric cartridge configuration

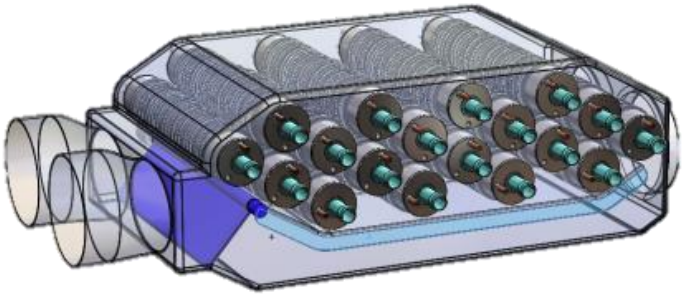

TEG building block (cartridge) defined and extrapolated to TEG design concept.

TE elements

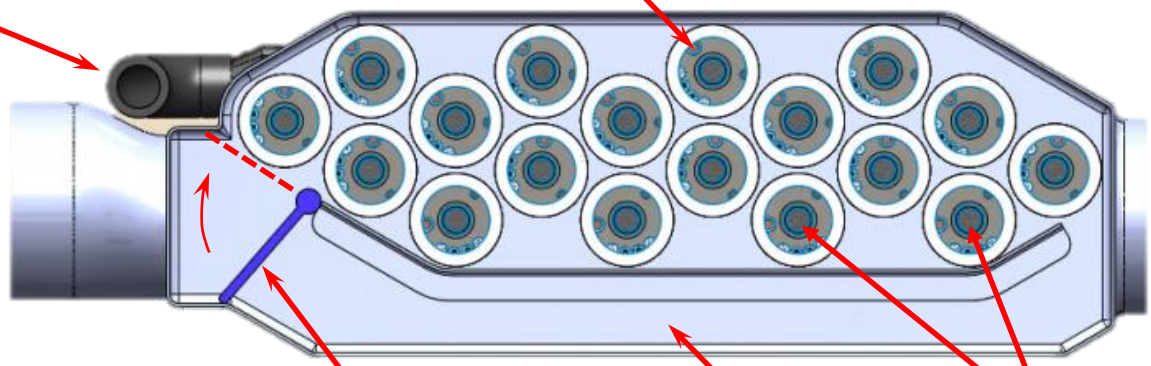

[Ref] "Thermoelectric Waste Heat Recovery Program for Passenger Vehicles", DOE Annual Merit Review 2013

LON BELL CONSULTING

Coolant tube enhancements

- Used to increase turbulence to increase heat transfer coefficient

  Examples:
  - Twisted tape insert
  - Coiled wire insert
  - Dimples
  - Ribbed
  - Roughened surface
  - Static mixer insert

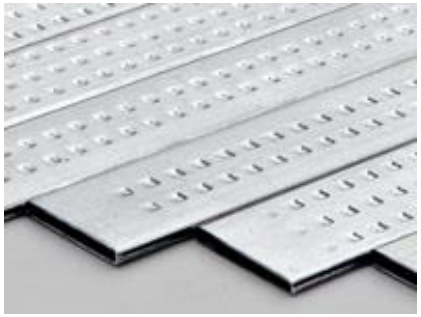

[Ref] http://www.arzonlimited.com/products/aluminum.htm

[Ref] http://www.stamixco-usa.com/plastic-static-mixers

[Ref] http://www.classtenindustries.com/Internally_Profiled_Tubes_Class-Ten_welded_finned_tubes_specialty_tube_coils_heat_exchanger.aspx

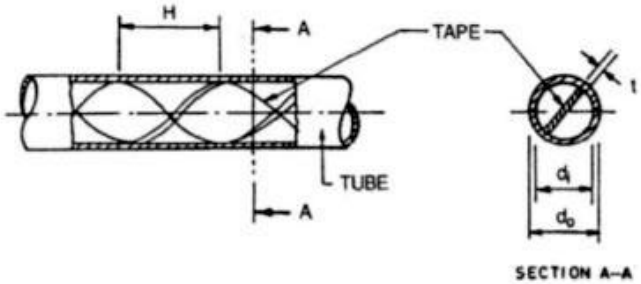

Figure 1. Schematic view of twisted-tape insert inside a tube, Akhavan-Behabadi et al. (2009).

LON BELL CONSULTING

Other cooling configuration options

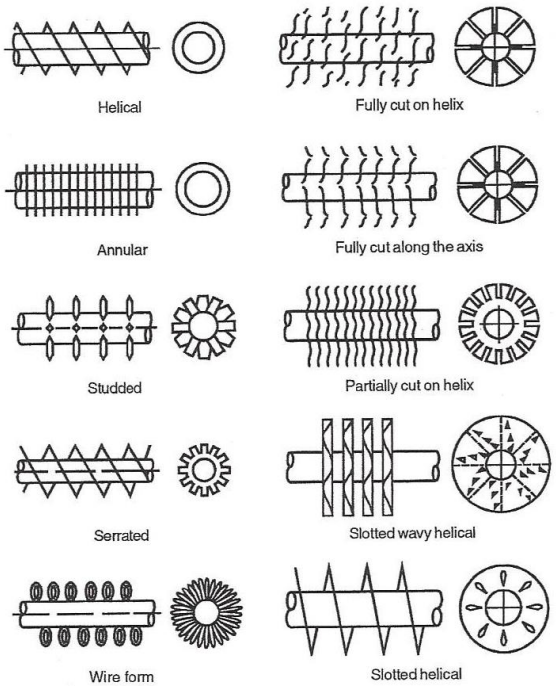

FIGURE 1.32 Individually finned tubes (Shah, 1981).

Different types of annular/radial finned tubes used with external flow

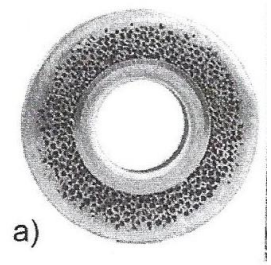

Ceramic foam (SiC) heat exchanger made by Ultramet

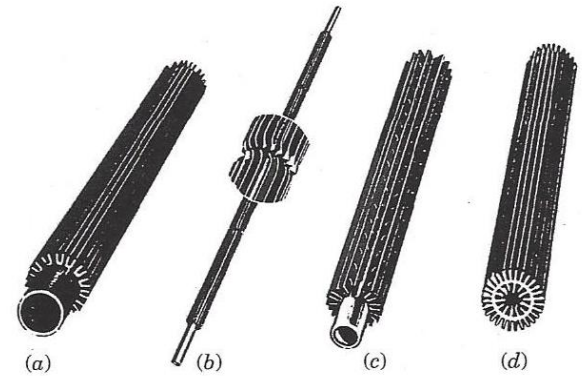

FIGURE 1.34 Longitudinal fins on individual tubes: (*a*) continuous plain; (*b*) cut and twisted; (*c*) perforated; (*d*) internal and external longitudinal fins. (Courtesy of Brown Fintube Company, Houston, TX.)

Different types of longitudinal finned tubes used with external or potentially internal flow

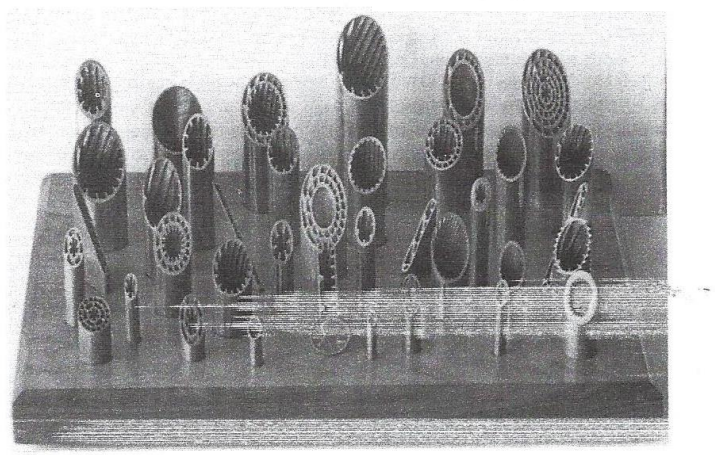

FIGURE 1.35 Internally finned tubes. (Courtesy of Forged-Fin Division, Noranda Metal Industries, Inc., Newtown, CT.)

Different types of internally finned tubes used for internal liquid coolant flow

LON BELL CONSULTING

Heat pipes

- Move heat away from the source where it can be rejected more effectively
- Excellent heat transfer properties
- No external power required to move working fluid
- Very low to no maintenance required

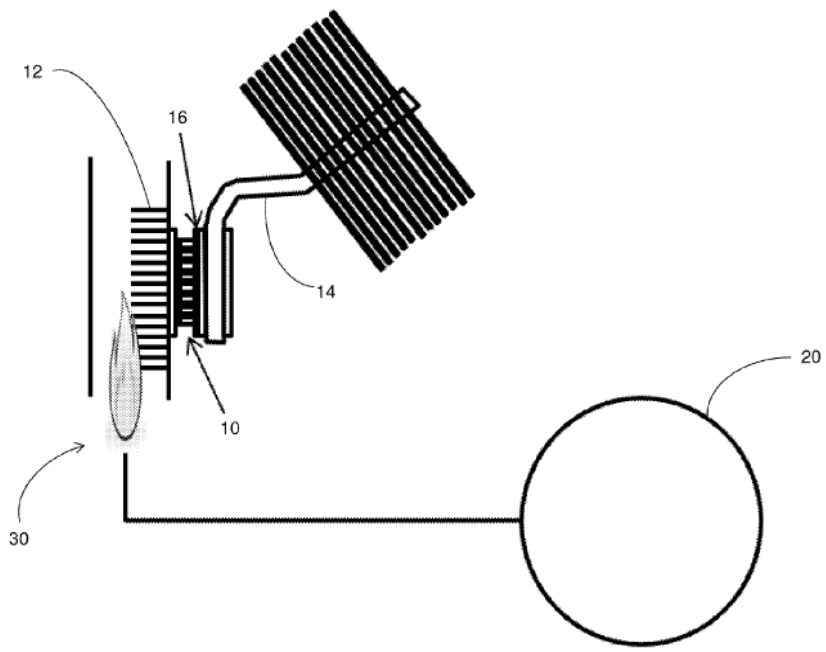

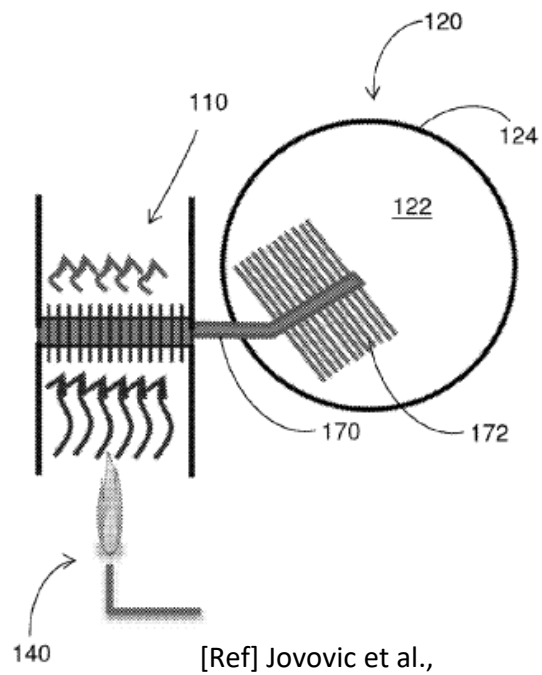

[Ref] Jovovic et al., "Thermoelectric generator for use with integrated functionality", US 2013/0340802 A1

LON BELL CONSULTING

Thank You!

Doug Crane, PE, PhD

dcrane@lonbellconsulting.com

626-394-9027

LON BELL CONSULTING

ALLIANCE FOR GREEN HEAT
low carbon, renewable and local

BTEC
Biomass Thermal Energy Council

Questions?

In support of the Alliance for Green Heat's 4th Wood Stove Competition in November 2018

NEXT GENERATION WoodStove DesignChallenge